TW-R30-M-B128
HF Tag

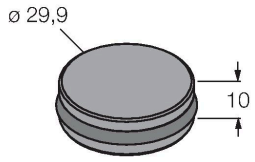

Technical data

Type	TW-R30-M-B128
ID	7030210
Remark to product	For direct mounting on and in metal
Data transfer	Inductive coupling
Technology	HF RFID
Operating frequency	13.56 MHz
Memory type	EEPROM
Chip	NXP I-Code SLI-X
Memory	128 Byte
Memory	Read/Write
Freely usable memory	112 Byte
Number of read operations	unlimited
Number of write operations	10^5
Typical read time	2 ms/Byte
Typical write time	3 ms/Byte
Radio communication and protocol standards	ISO 15693 NFC Typ 5
Minimum distance to metal	0 mm
Temperature during read/write access	-25…+85 °C
Temperature outside detection range	-40…+85 °C
	140 °C, 1 × 100 h
Design	Hard tag, R30
Diameter	30 mm
Housing material	Plastic, PET
Active area material	Plastic, PET, black
Protection class	IP68
Packaging unit	1

Features

- 3 different mounting options in/on metal, incl. accessories
- EEPROM, memory 128 byte
- For direct mounting on and in metal

Functional principle

The HF read/write devices operating at a frequency of 13.56 MHz form a transmission zone the size of which (0…500 mm) varies, depending on the combination of read/write head and tag used.
The read/write distances mentioned here only represent standard values measured under laboratory conditions, free from any influences caused by surrounding materials.
The read/write distances of tags suitable for mounting in/on metal were determined in/on metal.
Attainable distances may vary by up to 30 % due to component tolerances, mounting conditions, ambient conditions and material qualities (especially when mounted in metal). Testing of the application under real operating conditions is therefore essential, especially with on-the-fly reading and writing!

TW-R30-M-B128| 29-07-2024 11-44 | Technical modifications reserved

Mounting instructions/Description

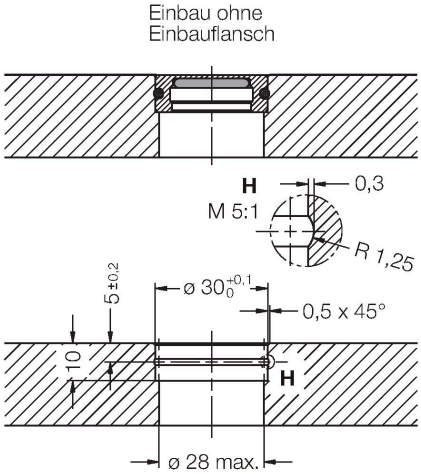

These data carriers can be mounted in 3 different ways:
1. Directly potted or glued in metal (without O-ring)
2. Installed in metal with O-ring (fixed with 2 screws)
3. Mounted upside down on metal (fixed with 2 screws)

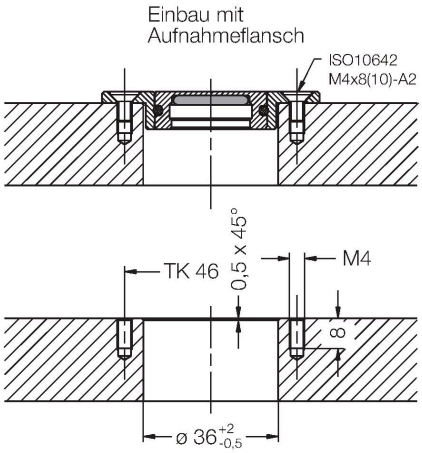

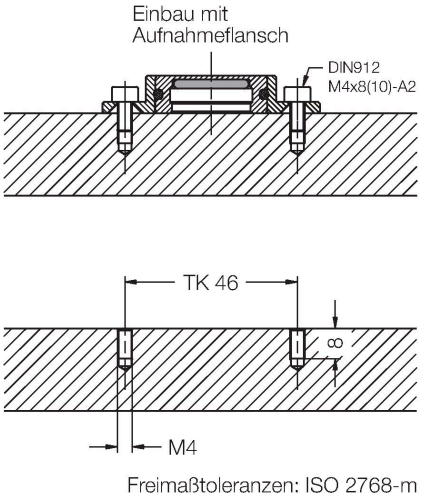

Freimaßtoleranzen: ISO 2768-m

TW-R30-M-B128| 29-07-2024 11-44 | Technical modifications reserved

Accessories

MF-R30	6901150
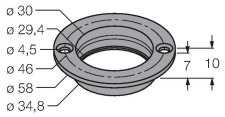	The flange facilitates mounting of the tag TW-R30-M-B128 (-K2) on or in the metal.

TW-R30-M-B128| 29-07-2024 11-44 | Technical modifications reserved